REV.	DESCRIPTION	DRAWN/DATE	CHECK/DATE	APPROVED/DATE
A	NEW RELEASE	Bobo.li 2015/11/20		LEO 2015/11/20

NOTES
1. THIS IS TYPE C PLUG TO USB2.0 STANDARD A PLUG CABLE ASSEMBLY.
2. THIS CABLE IS DESIGNED TO COMPLY WITH USB 1.1 TYPE C SPECIFICATION.
3 ELECTRICAL FOR CABLE
3.1 CONDUCTOR RESISTANCE: 5Ω MAX AT 20°C FOR CABLE AREA.
3.2 INSULATION RESISTANCE: 300VDC 20MΩ MIN FOR 10mS
3.3 OPEN&SHORT TEST:100%
4. GREEN ENVIRONMENT PROTECTION: ALL PARTS ARE THE MICRO POLLUTANT
5. SYMBOL DESCRIPTION:

☒	MAJOR DIMENSION x 3	④	MATERIAL
■	CPK DIMENSION x 0	△	REVISION
99	DIMENSION NUMBER	( )	REFERENCE

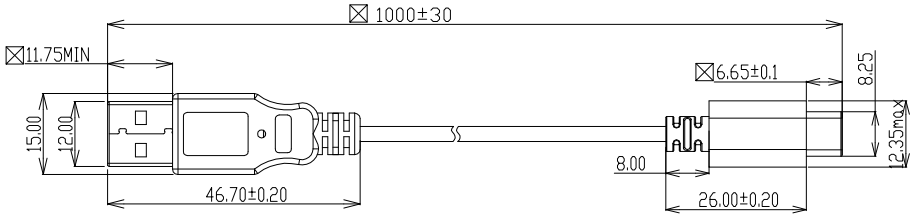

PIN ASSIGNMENT

CN1 (USB Type-C Plug)		CN2 (USB 2.0 Std-A PLUG)		WIRE
Pin	Signal Name	Pin	Signal Name	COLOR
A4,B4,A9,B9	VBUS	1	VBUS	RED
A5	CC			
B5	VCONN			
A7	Dn1	2	D-	WHITE
A6	Dp1	3	D+	GREEN
A1,B1,A12,B12,Shell	GND,Shield	4,Shell	GND,Shield	DRAIN,BRAID

Rp 56KΩ±5%

Notes:
1.Pin A5(CC)of the USB Type-C plug shall be connected to VBUS through a resistor Rp.
2.Pin B5 (VCONN) of the USB Type-C plug shall be used in electronically marked versions of this cable.
3.Contacts B6 and B7 should not be present in the USB Type-C plug.
4.All VBUS pins shall be connected together within the USB Type-C plug. Bypass capacitors are not required for the VBUS pins in this cable.
5.All Ground return pins shall be connected together within the USB Type-C plug.
6.All USB Type-C plug pins that are not listed in this table shall be open (not connected).

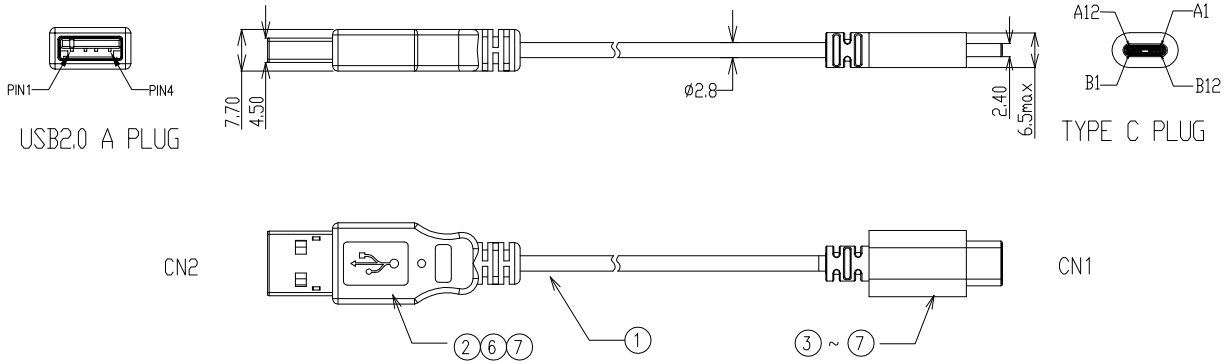

ITEM	ACON P/N OR NAME	MATERIAL/DESCRIPTION	DIM	QTY
7	RESISTOR	RESISTOR 56KΩ±5%	/	1
6	YMA-PVK0160P01	PVC 60P COLOR BLACK	TBD	2
5	YMA-PEL0100P01	YUSHUNRONG LD-PE G816 HF	TBD	1
4	USB TYPE C PCB	USB TYPE C PCB FR-4 T0.8mm 4 Layout,Cu T=1 Oz,	/	1
3	NBW31-AK5V20	USB TYPE C PLUG(* Seamless drawn shell.)+Up Shell&Down Shell,	/	1
2	UAW38-4K5200	USB A TYPE CONNECTOR WHITE INSULATION MALE SOLDER TYPE VER:2.0 PLATED GOLD 30U"FOUR TYPE	/	1
1	USB2.0 CABLE	USB2.0 CABLE 30#(11/0.08)*2C+24#(40/0.08)*1C+FEAB ø2.8mm, BLACK JACKET UL2725	1800	1

BOM LIST

ACON P/N: CBAUB-C50-100A
CUSTOMER: NON
CUSTOMER P/N: NON

GENERAL TOLERANCE: <30 ±1; >30~50±1.5; >50~100±2; >100 ±3
ANGLE TOLERANCE: ±2.0°
CRFQ: NON
SCALE: NON
UNIT: mm
SHEET: 1 OF 1

DRAWN: Bobo.Li DATE: 2015/11/20
CHECKED: DATE:
APPROVED: LEO DATE: 2015/11/20

ACON ADVANCED-CONNECTEK INC.

TITLE: USB Type-C to USB 2.0 Standard-A Cable Assembly ,1M,3A
SERIES: USB CABLE ASSEMBLY
SIZE: A3
file: C-CBAUB-C50-100A
REV. A

All materials meet the ACON's spec.environment-related substances management technical standard

A3R-電裝事業處