REV.	DESCRIPTION	DRAWN/DATE	CHECK/DATE	APPROVED/DATE
X1	NEW RELEASE	APRIL 2016/01/06		LEO 2016/01/06

FEATURE

1. THIS IS USB TYPE C PLUG TO TYPE C PLUG With E-marker FULL FEATURE CABLE ASSEMBLY.
2. THIS CABLE IS DESIGNED TO COMPLY WITH USB 1.2 DRAFT TYPE C SPECIFICATION,USB3.1 GEN2.
3 ELECTRICAL FOR CABLE
3.1 CONDUCTOR RESISTANCE: 5Ω MAX AT 20°C FOR CABLE AREA.
3.2 INSULATION RESISTANCE: 300VDC 20MΩ MIN FOR 10mS
3.3 OPEN&SHORT TEST:100%
4. GREEN ENVIRONMENT PROTECTION: ALL PARTS ARE THE MICRO POLLUTANT.
5. SYMBOL DESCRIPTION:

☒	MAJOR DIMENSION x 3	④	MATERIAL
■	CPK DIMENSION x 0	△	REVISION
99	DIMENSION NUMBER	( )	REFERENCE

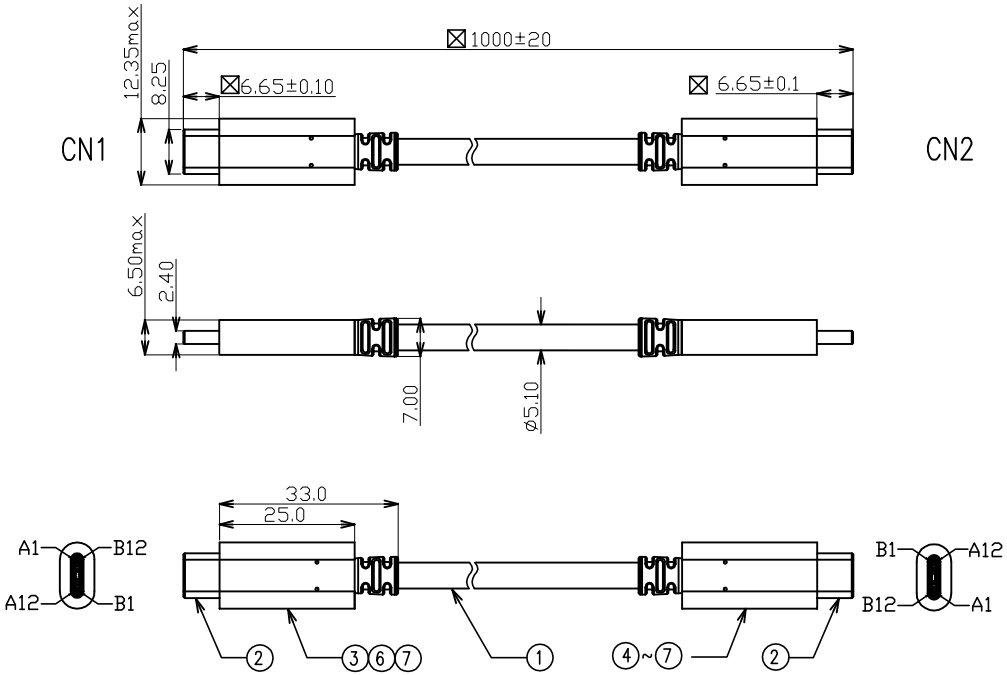

PIN ASSIGNMENT

CN1 (Type C Plug 1)		WIRE		CN2 (Type C Plug 2)	
Pin	Signal Name	Wire No.	Signal Name	Pin	Signal Name
A1,B1,A12,B12	GND	1 [16]	GND_PWRrt1 [GND_PWRrt2]	A1,B1,A12,B12	GND
A4,B4,A9,B9	VBUS	2 [17]	PWR_VBUSt [PWR_VBUSr]	A4,B4,A9,B9	VBUS
A5	CC	3	CC	A5	CC
B5	VCONN	18	PWR_VCONN	B5	VCONN
A6	Dp1	4	UTP_Dp	A6	Dp1
A7	Dn1	5	UTP_Dn	A7	Dn1
A2	SSTXp1	6	SDPp1	B11	SSRXp1
A3	SSTXn1	7	SDPn1	B10	SSRXn1
B11	SSRXp1	8	SDPp2	A2	SSTXp1
B10	SSRXn1	9	SDPn2	A3	SSTXn1
B2	SSTXp2	10	SDPp3	A11	SSRXp2
B3	SSTXn2	11	SDPn3	A10	SSRXn2
A11	SSRXp2	12	SDPp4	B2	SSTXp2
A10	SSRXn2	13	SDPn4	B3	SSTXn2
A8	SBU1	14	SBU_A	B8	SBU2
B8	SBU2	15	SBU_B	A8	SBU1
SHELL	Shield	Braid	Shield	SHELL	Shield

C1 — A1,B1,A12,B12 / A4,B4,A9,B9
IC — A5, B5
C1 — A4,B4,A9,B9

Notes:
1. This table is based on the assumption that coaxial wire construction is used for all SDP's and there are no drain wires. The shields of the coaxial wires are connected to the ground pins. If shielded twisted pair is used, then drain wires are needed and shall be connected to the GND pins.
2. Pin B5 (VCONN) of the USB Type-C plug shall be used in electronically marked versions of this cable. See Section 4.9.
3. Contacts B6 and B7 should not be present in the USB Type-C plug.
4. All VBUS pins shall be connected together within the USB Type-C plug. A 10 nF bypass capacitor (minimum voltage rating of 30 V) is required for the VBUS pin in the full-featured cable at each end of the cable. The bypass capacitor should be placed as close as possible to the power supply pad.
5. All GND pins shall be connected together within the USB Type-C plug.

ITEM	ACON P/N OR NAME	MATERIAL/DESCRIPTION	DIM	QTY
7	YMA-PVK0150P01	PVC 50P BLACK UL94V-0	TBD	2
6	YMA-PEL0100P07	LDPE Color:Nature HF	TBD	2
5	Capacitor	Cap 22nF±10% 50V 0402	/	2
4	USB TYPE C PCB	USB TYPE C PCB FR-4 T0.8mm 4 Layout	/	1
3	USB TYPE C PCBA	USB TYPE C PCB FR-4 T0.8mm 6 Layout, +Capacitor + RESISTOR + IC(E-Marker)	/	1
2	NBW31-*********	USB TYPE C PLUG(* Seamless drawn shell.)+Up Shell&Down Shell.	/	2
1	USB TYPE C CABLE	USB3.1 (30#*1P)*4C +32#*1P+32#*4C+23*1C+JACK(PVC),BLACK,ø5.1mm	1000	1

BOM LIST

ACON P/N: CBAUB-C67-100A
CUSTOMER: NON
CUSTOMER P/N: NON

GENERAL TOLERANCE	ANGLE TOLERANCE	DRAWN	DATE
±0.2	±2.0°	APRIL	2016/01/06
		CHECKED	DATE
CRFQ NON			
SCALE NON	UNIT mm	APPROVED	DATE
SHEET 1 OF 1		LEO	2016/01/06

ACON ADVANCED-CONNECTEK INC.

TITLE
USB3.1 Gen2 Type-C
With E-marker Cable Assembly L1M 5A

SERIES: USB CABLE ASSEMBLY
SIZE A3
file: C-CBAUB-C67-100A
REV. X1